SUPPORT TYPE OF ROCK CLASS I
1:100

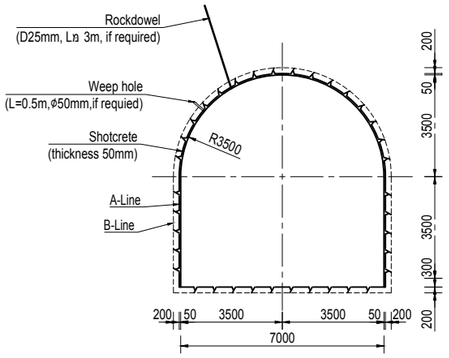

SUPPORT TYPE OF ROCK CLASS II
1:100

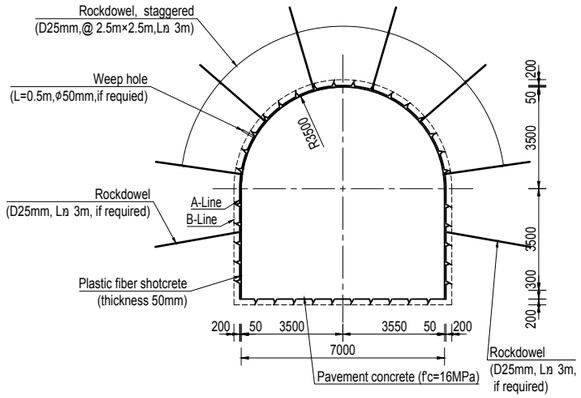

SUPPORT TYPE OF ROCK CLASS III
1:100

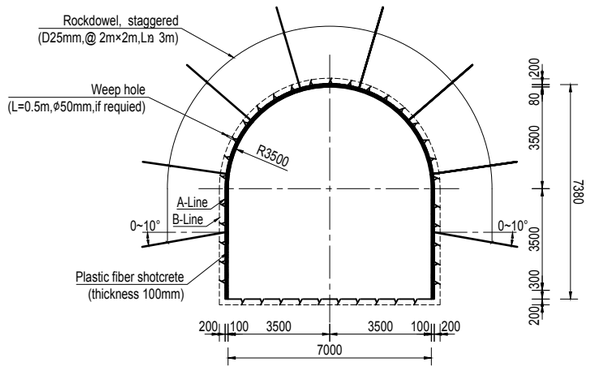

SUPPORT TYPE OF ROCK CLASS IV
(WITHOUT STEEL SUPPORT) 1:100

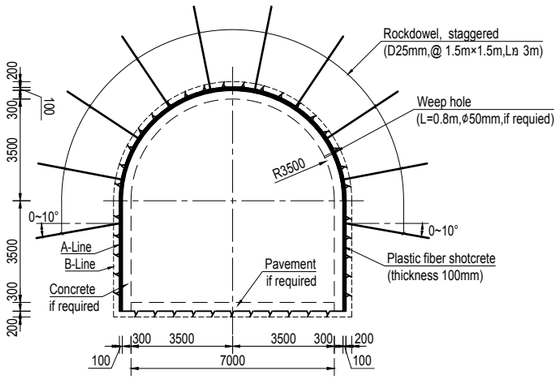

SUPPORT TYPE OF ROCK CLASS IV
(WITH STEEL SUPPORT) 1:100

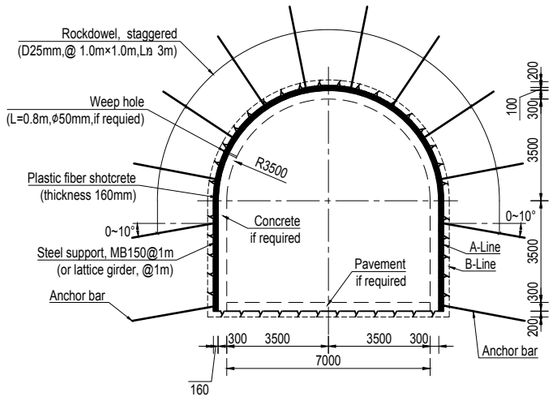

DETAIL OF PAVEMENT CONCRETE
1:10

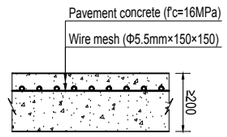

Scale 1:100 0 1 2 3 4 5m

Scale 1:10 0 0.1 0.2 0.3 0.4 0.5m

NOTE

1. All dimensions are in millimeters, and coordinates, chainages & elevations are in meters.
2. The excavation and support methods can be adjusted according to the actual situation after the geological conditions are revealed.
3. It is evident that the maximum unsupported span is a guideline, only, and needs continuous adjustment to the prevailing rock conditions and construction requirements at the spot.
4. The cylinder specified compressive strength of tunnel shotcrete and cement mortar at 28 days of age is 25MPa.
5. The specified compressive strength of concrete is the cylinder strength at age of 28 days.
6. The yield strength and of steel is 250MPa.
7. Rust preventive compound will be sprayed on exposed surface of steel structure.
8. Symbol description:
   A-Line is the design excavation line.
   B-Line is the overbreak line.
   R denotes round bar, yield strength of the round bar is 280MPa.
   D denotes deformed bar, yield strength of the deformed bar is 500MPa;
9. The forepoling is mainly used in the tunnel section with poor surrounding rock geology, which should be used together with dowel and steel support or lattice girder , and the spacing of dowel should be consistent with that of steel support.
10. The detail of weep holes, rock dowel, steel support and steel lattice girder see the drawing No. UT1-C-000-CVL-DG-40001.
11. The end position of the access tunnel may be adjusted according to the final design of the powerhouse.
12. The steel support or lattice girder to rock class V / IV is subjected to the exposed geological condition.

REFERENCE DRAWINGS

UT1-C-000-CVL-DG-40001	Detailed Design Drawing of Excavation and Support for Underground Cavern
UT1-C-060-CVL-DG-43001	Layout Drawing of Work Adit for Steel Penstock Tunnel
UT1-C-090-CVL-DG-64001	Layout of Access Tunnel to Powerhouse

SYMBOL AND LEGEND

FOR APPROVAL

THIS DRAWING AND THE INFORMATION CONTAINED HEREIN ARE PRELIMINARY FOR APPROVAL.
IT CAN BE CHANGED IN THE EXECUTION STAGE
THIS DRAWING IS THE PROPERTY OF DOOSAN HEAVY INDUSTRIES & CONSTRUCTION CO., LTD.
IT IS NOT TO BE COPIED OR USED IN ANY WAY DETRIMENTAL TO THE COMPANY.

REV. NO.	DATE	DESCRIPTION	DRAWN	CHKD.	APPD.
0A	15.JUN.2022	First issue	Han Y.H.	Lei Y.G.	Luo L. Zhou L.S.

PROJECT TITLE

Upper Trishuli-1 HEP (216MW)

OWNER

NWEDC NEPAL WATER AND ENERGY DEVELOPMENT CO. PVT. LTD.

OWNER'S ENGINEER

TRACTEBEL engie jade CONSULT

CONTRACTOR

DOOSAN Enerbility

DRAWING TITLE

Excavation and Support Drawing of Work Adit for Steel Penstock Tunnel

INDEX	DRAWING NUMBER	SHEET NO.	REV. NO.
A	UT1-C-060-CVL-DG-43002- 01	1 OF 3	0A

A1 (594 x 841 MM)

ACROSS SECTION OF FOREPOLING
(Applied to Rock Class V) 1:50

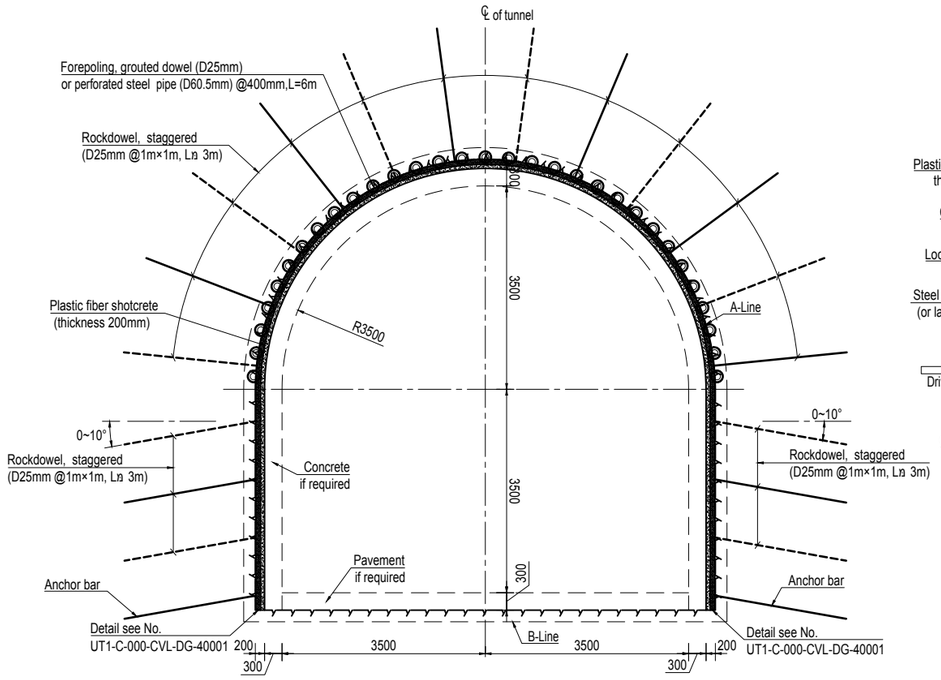

LONGITUDINAL SECTION OF FOREPOLING
(Applied to Rock Class V) 1:50

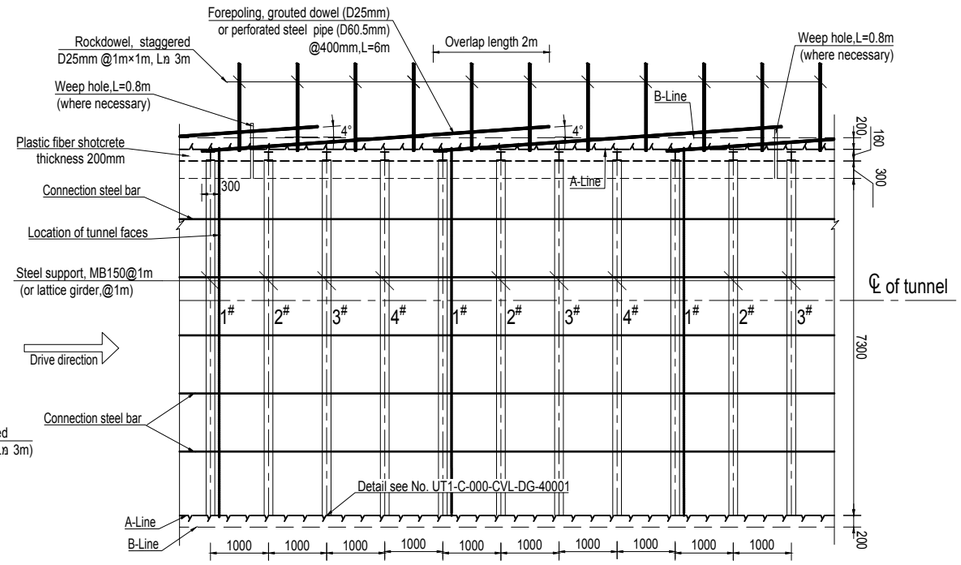

NOTE: (1)The gaps behind the steel ribs need always be filled with shotcrete and/or concrete, not with rock blocks.
(2)The excavation profile may need to be adjusted to a "saw-tooth profile" and size of ribs/girders may also be adjusted.

TUNNEL SUPPORT PATTERN

Rock mass quality	40≥Q	10≤Q<40	4≤Q<10	1≤Q<4		Q<1
Support type	I	II	III	IV (Without steel support)	IV (With steel support)	V Same as type IV (With steel support)
Inner dimension(m)	W=7m, H=7m					
	Excavation Parameter					
ESR	1.3	1.3	1.3	1.3		1.3
Excavation span(m)	3	3	2	1.5		0.5~1
Calculated MUS*(m)	11	9	5	3		1
MUS* for shotcrete application(m)		9	2	1.5		1
MUS* for rock dowel installation(m)		6	4	3		0.5~1
MUS* for steel support installation(m)				0.5~1.0		0.5~1
Excavation method	Blasting			Blasting/mechanically		Mechanically
Initial support parameters						
Weep hole, Φ50mm,L=0.5m / 0.8m	where necessary					
Plastic fiber shotcrete,f'c=25MPa	T=50mm	T=50mm	T=100mm	T=100mm	T=160mm	For class V rock, the same support scheme as class IV rock can be adopted after grouting is used to improve the integrity and firmness of surrounding rock.
Rock dowel, D25,L=3m,alternately	Spot	@2.5m×2.5m	@2m×2m	@1.5m×1.5m	@1.0m×1.0m	
Steel support, MB150 (or lattice girder)					@1m	
Forepoling grouted dowel,D25mm, @400mm, L=6m					where necessary	
*MUS Maximum Unsupported Span.						

Scale 1:50 0 0.5 1 1.5 2 2.5m

NOTE
1. All dimensions are in millimeters, and coordinates, chainages & elevations are in meters.
2. Other notes please refer to sheet 1.

REFERENCE DRAWINGS

UT1-C-000-CVL-DG-40001	Detailed Design Drawing of Excavation and Support for Underground Cavern
UT1-C-060-CVL-DG-43001	Layout Drawing of Work Adit for Steel Penstock Tunnel
UT1-C-090-CVL-DG-64001	Layout of Access Tunnel to Powerhouse

SYMBOL AND LEGEND

FOR APPROVAL

THIS DRAWING AND THE INFORMATION CONTAINED HEREIN ARE PRELIMINARY FOR APPROVAL.
IT CAN BE CHANGED IN THE EXECUTION STAGE
THIS DRAWING IS THE PROPERTY OF DOOSAN HEAVY INDUSTRIES & CONSTRUCTION CO., LTD.
IT IS NOT TO BE COPIED OR USED IN ANY WAY DETRIMENTAL TO THE COMPANY.

REV. NO.	DATE	DESCRIPTION	DRAWN	CHKD.	APPD.
0A	15.JUN.2022	First issue	Han Y.H.	Lei Y.G.	Luo L. Zhou L.S.

PROJECT TITLE
Upper Trishuli-1 HEP (216MW)

OWNER
NWEDC NEPAL WATER AND ENERGY DEVELOPMENT CO. PVT.LTD.

OWNER'S ENGINEER
TRACTEBEL ENGIE
jade CONSULT

CONTRACTOR
DOOSAN Enerbility

DRAWING TITLE
Excavation and Support Drawing of Work Adit for Steel Penstock Tunnel

INDEX	DRAWING NUMBER	SHEET NO.	REV. NO.
A	UT1-C-060-CVL-DG-43002- 02	2 OF 3	0A

A1 (594 x 841 MM)

PLAN OF BRANCH OF ADIT & PENSTOCK TUNNEL

SCALE 1:100

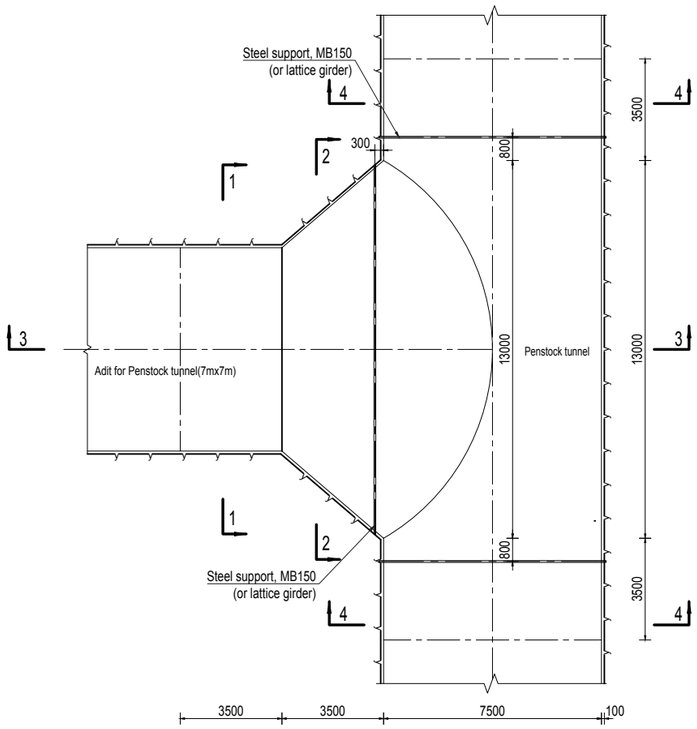

NOTE) The steel ribs at the start and end of the branch are only required in Class III & IV.

SECTION 3-3

SCALE 1:100

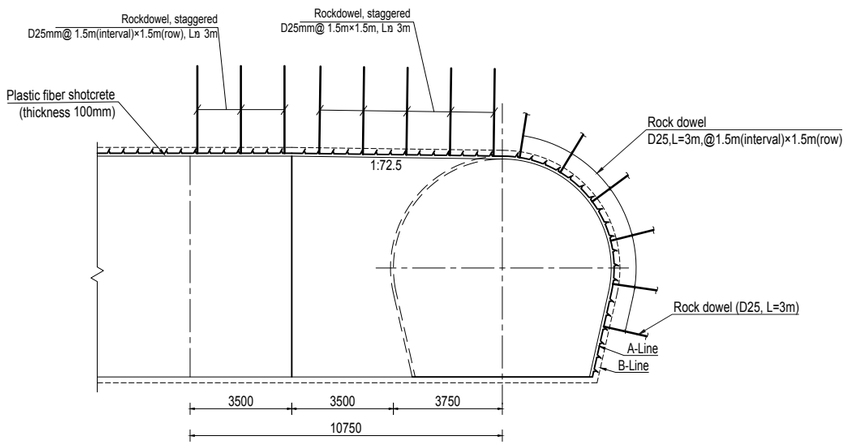

SECTION 1-1

SCALE 1:100

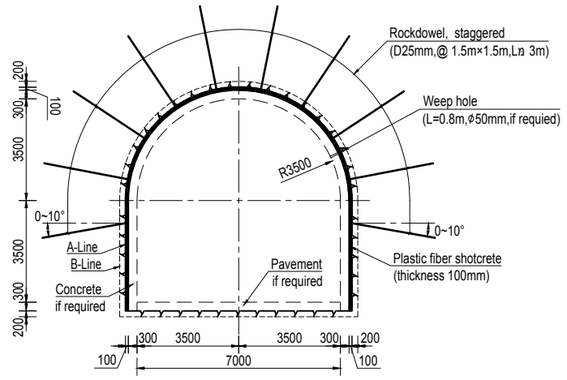

SECTION 2-2

SCALE 1:100

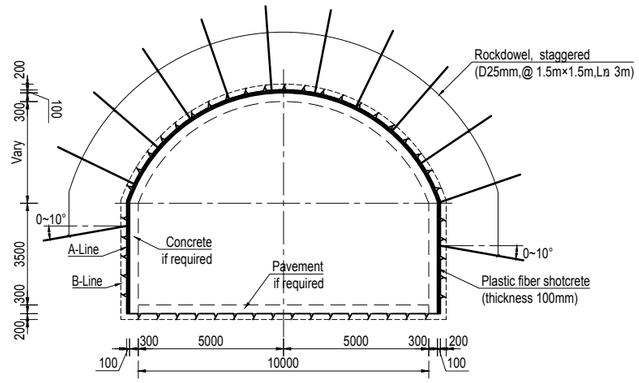

SECTION 4-4

SCALE 1:100

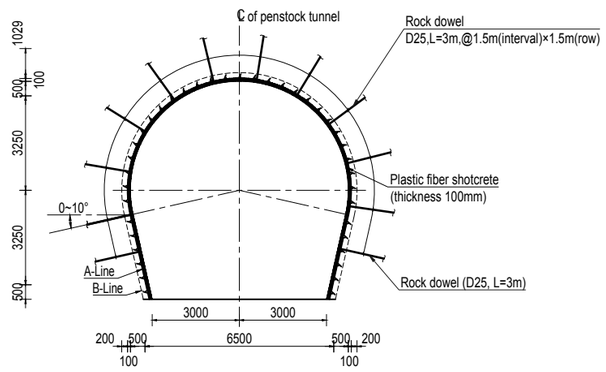

Scale 1:100 0 1 2 3 4 5m

NOTE

1. All dimensions are in millimeters, and coordinates, chainages & elevations are in meters.
2. Other notes please refer to sheet 1.

REFERENCE DRAWINGS

UT1-C-000-CVL-DG-40001	Detailed Design Drawing of Excavation and Support for Underground Cavern
UT1-C-060-CVL-DG-43001	Layout Drawing of Work Adit for Steel Penstock Tunnel
UT1-C-090-CVL-DG-64001	Layout of Access Tunnel to Powerhouse

SYMBOL AND LEGEND

FOR APPROVAL

THIS DRAWING AND THE INFORMATION CONTAINED HEREIN ARE PRELIMINARY FOR APPROVAL.
IT CAN BE CHANGED IN THE EXECUTION STAGE.
THIS DRAWING IS THE PROPERTY OF DOOSAN HEAVY INDUSTRIES & CONSTRUCTION CO., LTD.
IT IS NOT TO BE COPIED OR USED IN ANY WAY DETRIMENTAL TO THE COMPANY.

REV. NO.	DATE	DESCRIPTION	DRAWN	CHKD.	APPD.
0A	15.JUN.2022	First issue	Han Y.H.	Lei Y.G.	Luo L. Zhou L.S.

PROJECT TITLE

Upper Trishuli-1 HEP (216MW)

OWNER

NWEDC NEPAL WATER AND ENERGY DEVELOPMENT CO. PVT. LTD.

OWNER'S ENGINEER

TRACTEBEL ENGIE / jade CONSULT

CONTRACTOR

DOOSAN Enerbility

DRAWING TITLE

Excavation and Support Drawing of Work Adit for Steel Penstock Tunnel

INDEX	DRAWING NUMBER	SHEET NO.	REV. NO.
A	UT1-C-060-CVL-DG-43002- 03	3 OF 3	0A

A1 (594 x 841 MM)